Instant Pot

PRO CRISP

MULTI-USE PRESSURE COOKER + AIR FRYER



User manual

Important safeguards
Products, parts and accessories
Get started
Pressure cooking 101
Releasing pressure
Control panel
Pressure control features
Cooking
Care, cleaning and storage
Troubleshooting
Warranty
Contact

Register your product today at **instantpot.com/support/register**.
Download the Instant Pot App for 1000+ recipes at **instantpot.com/app**.

IMPORTANT SAFEGUARDS

(Yes, we have to)

At Instant Brands™ your safety always comes first. The Instant Pot® Pro family was designed with your safety in mind, and we mean business. Check out this Instant Pot's long list of safety mechanisms on **instantpot.com** to see what we mean.

As always, be cautious when using electrical appliances and follow basic safety precautions.

01 READ ALL INSTRUCTIONS, SAFEGUARDS AND WARNINGS BEFORE USE. FAILURE TO FOLLOW THESE SAFEGUARDS AND INSTRUCTIONS MAY RESULT IN INJURY AND/OR PROPERTY DAMAGE.

02 Use only the Instant Pot Pro Crisp pressure cooking lid or air fryer lid with the Instant Pot Pro Crisp multicooker base. Using any other lids may cause injury and/or damage.

03 The Pro Crisp air fryer lid is only compatible with the Instant Pot Pro Crisp Series inner pot with easy-grip handles. Always use an inner pot of the appropriate size. Failure to follow these instructions may lead to burns or other injuries and/or damage.

04 For household use only. Not for commercial use. Do not use the appliance for anything other than its intended use.

05 For countertop use only. Always operate the appliance on a stable, non-combustible, level surface.

- DO NOT place the multicooker base on anything that may block the vents on the bottom of the base.
- DO NOT cover or block the air vents on the air fryer lid while it is in operation. Doing so will prevent even cooking and may cause damage to the appliance. Leave at least 5" / 13 cm of space around the air fryer lid when in use.
- DO NOT operate the air fryer lid on or near combustible materials such as tablecloths and curtains.

⚠ WARNING

Read this manual carefully and completely and retain for future reference. Failure to adhere to safety instructions may result in serious injury or damage.

IMPORTANT SAFEGUARDS

06 Heat from an external source will damage the appliance.
- DO NOT place the appliance on or close to a hot stove, a heated oven, or upon another appliance.
- DO NOT use the appliance near water or flame.
- DO NOT use outdoors. Keep out of direct sunlight.

07 DO NOT touch the appliance's hot surfaces. Only use the multicooker base handles when carrying or moving the appliance, or the air fryer lid handle when moving the lid.
- DO NOT move the multicooker when it is under pressure.
- DO NOT touch the metal portion of the pressure cooking lid when the appliance is in operation; this could result in injury.

08 DO NOT touch hot accessories during or immediately after cooking.
- Always use proper hand protection and use extreme caution when handling hot accessories or the hot inner pot.
- Always place hot accessories on a heat-resistant surface or cooking plate.

09 The removable inner pot can be extremely heavy when full of ingredients. Exercise care when lifting the inner pot from the multicooker base to avoid burn injury.
- Extreme caution must be used when the inner pot contains hot food, hot oil or other hot liquids.
- DO NOT move the appliance while it is in use and use extreme caution when disposing of hot grease.

10 **⚠ CAUTION** During pressure cooking, overfilling the inner pot causes a risk of clogging in the steam release pipe. This may lead to developing excess pressure, which may result in burns, injury, and/or property damage.
- DO NOT fill over the **Max PC Fill** line as indicated on the inner pot.
- DO NOT fill the inner pot over the **Half Fill** line (as indicated on the inner pot) when cooking foods that expand during cooking such as rice or dried vegetables.

⚠ WARNING

Read this manual carefully and completely and retain for future reference. Failure to adhere to safety instructions may result in serious injury or damage.

IMPORTANT SAFEGUARDS

11 **⚠WARNING** This appliance cooks under pressure. Any pressure in the appliance can be hazardous. Allow the appliance to depressurize naturally or release all excess pressure before opening. Inappropriate use may result in burns, injury and/or property damage. See **Releasing pressure** for safe venting techniques.

- Make sure the appliance is properly closed before operating. Refer to **Pressure control features: pressure cooking lid**;
- DO NOT cover or obstruct the steam release valve and/or float valve with cloth or other objects;
- DO NOT attempt to open the appliance until it has depressurized, and all internal pressure has been released. Attempting to open the appliance while it is still pressurized may lead to sudden release of hot contents and may cause burns or other injuries;
- DO NOT place your face, hands or exposed skin over the steam release valve or float valve when the appliance is in operation or has residual pressure;
- DO NOT lean over the appliance when removing the lids, as heat and steam escape when the lid is removed;
- Turn the appliance off if steam escapes from the steam release valve and/or float valve in a steady stream for longer than 3 minutes during **Pre-heating** or **Cooking**;
- If steam escapes from the sides of the pressure cooking lid, turn the appliance off and make sure the sealing ring is properly installed. See **Pressure control features: sealing ring**;
- DO NOT attempt to force the pressure cooking lid off the Instant Pot multicooker base.

12 When pressure cooking food with a doughy or thick texture, or a high fat/oil content, contents may splatter when opening the pressure cooking lid. Follow recipe instructions for safe pressure release method. See **Releasing pressure**.

13 When cooking meat with skin (e.g. sausage with casing), the skin can swell when heated. Do not pierce the skin while it is swollen; this could result in scalding injury.

⚠ WARNING

Read this manual carefully and completely and retain for future reference. Failure to adhere to safety instructions may result in serious injury or damage.

IMPORTANT SAFEGUARDS

14 When using the air fryer lid, do not overfill the air fryer basket. Overfilling may cause food to contact the heating element, which may result in fire and/or personal injury.

15 DO NOT touch accessories during or immediately after cooking. To avoid personal injury,

- Always use proper hand protection when removing accessories, and to handle the inner pot;
- Always place hot accessories on a heat-resistant surface or cooking plate;
- Only place the air fryer lid on the protective pad provided; do not place on countertop;
- Use extreme caution when disposing of hot grease.

Failure to do so may result in serious injury or property damage.

16 While using the air fryer lid, the internal temperature of the cooking chamber reaches several hundred degrees. To avoid personal injury, never place unprotected hands inside the cooking chamber until it has cooled to room temperature.

17 DO NOT use this appliance for deep frying or pressure frying with oil.

18 **⚠ CAUTION** When the air fryer lid is in operation, hot air is released through the air vents. Keep your hands and face at a safe distance from the air vents and take extreme caution when removing hot accessories from the appliance. Failure to do so may result in injury or property damage.

19 Should the unit emit black smoke when using the air fryer lid, press **Cancel** and unplug the appliance immediately. Wait for smoking to stop before removing the lid, then clean thoroughly. For further information see **Troubleshooting**.

⚠ WARNING

Read this manual carefully and completely and retain for future reference. Failure to adhere to safety instructions may result in serious injury or damage.

IMPORTANT SAFEGUARDS

20 Proper maintenance is recommended before and after each use:

- Check the steam release valve, steam release pipe, anti-block shield and float valve on the pressure cooking lid for clogging;
- Check the heating element and element cover on the air fryer lid for grease and food debris;
- Before inserting the inner pot into the multicooker base, make sure both parts are dry and free of food debris;
- Let the appliance cool to room temperature before cleaning or storage.

See **Care, cleaning and storage** for more information.

21 To turn off, select **Cancel**, then remove the plug from the power source. Always unplug when not in use, as well as before adding or removing parts or accessories, and before cleaning. To unplug, grasp the plug and pull from the outlet. Never pull from the power cord.

22 Spilled food can cause serious burns. A short power-supply cord is provided to reduce the hazards resulting from grabbing, entanglement and tripping.

- DO NOT let the power cord hang over edges of tables or counters, or touch hot surfaces or open flame, including the stovetop.
- DO NOT use below-counter power outlets, and never use with an extension cord.
- Keep the appliance and cords away from children.

23 Regularly inspect the appliance and power cord. Do not operate the appliance if the power cord or plug is damaged, or after the appliance malfunctions or is dropped or damaged in any manner. For assistance, contact Customer Care by **email**, **chat**, or by phone at **1-800-828-7280**.

24 DO NOT use any parts, accessories or attachments not authorized by Instant Brands Inc. The use of parts, accessories or attachments not recommended by the manufacturer may cause a risk of injury, fire or electric shock. To prevent personal injury and damage to the appliance, only replace the sealing ring with an authorized Instant Pot sealing ring.

25 Avoid contact with moving parts as this may result in injury.

⚠ WARNING

Read this manual carefully and completely and retain for future reference. Failure to adhere to safety instructions may result in serious injury or damage.

IMPORTANT SAFEGUARDS

26 DO NOT attempt to repair, replace or modify components of the appliance, as this may cause electric shock, fire or injury, and will void the warranty.

27 DO NOT tamper with any of the safety mechanisms, as this may result in injury or property damage.

28 The multicooker base and air fryer lid contain electrical components. To avoid electrical shock:

- DO NOT put liquid of any kind into the multicooker base without the inner pot in place;
- DO NOT immerse the multicooker base, the air fryer lid, or the power cord or plug in water or other liquid;
- DO NOT rinse the multicooker base or air fryer lid under a tap.

29 DO NOT use the appliance in electrical systems other than 120 V~ 60 Hz for North America. Do not use with power converters or adapters.

30 This appliance is NOT to be used by children or by persons with reduced physical, sensory or mental capabilities. Close supervision is necessary when any appliance is used near children and these individuals. Children should not use or play with this appliance.

31 DO NOT leave the appliance unattended while in use. Never connect this appliance to an external timer switch or separate remote-control system.

32 DO NOT store any materials in the multicooker base or inner pot when not in use.

33 DO NOT place any combustible materials in the multicooker base or inner pot, such as paper, cardboard, plastic, Styrofoam or wood.

34 DO NOT use the included accessories in a microwave, toaster oven, convection or conventional oven, or on a ceramic cooktop, electric coil, gas range or outdoor grill.

SAVE THESE INSTRUCTIONS.

⚠ WARNING

Read this manual carefully and completely and retain for future reference. Failure to adhere to safety instructions may result in serious injury or damage.

IMPORTANT SAFEGUARDS

⚠ WARNING

Electrical shock hazard. Use grounded outlet only.

- DO NOT remove ground.
- DO NOT use an adapter.
- DO NOT use an extension cord.

Failure to follow these instructions may result in electric shock and/or serious injury.

⚠ WARNING

THE FAILURE TO FOLLOW ANY OF THE IMPORTANT SAFEGUARDS AND/OR THE INSTRUCTIONS FOR SAFE USE IS A MISUSE OF YOUR APPLIANCE THAT CAN VOID YOUR WARRANTY AND CREATE THE RISK OF SERIOUS INJURY.

Special cord set instructions

Per safety requirement, a short power supply cord is provided to reduce the hazards resulting from entanglement and tripping.

This appliance has a 3-prong grounding plug. To reduce the risk of electric shock, plug the power cord into a grounded electrical outlet that is easily accessible.

Product specifications

Model: Pro Crisp AF 8	1500 W	120 V ~ 60 Hz	8 Quarts / 7.6 Litres	26.2 lbs / 11.88 kg

	Pro Crisp AF 8
	With Pressure Cooker Lid: in: 14.78 L × 14.24 W × 14.17 H cm: 37.55 L × 36.16 W × 36 H
	With Air Fryer Lid: in: 14.78 L × 14.24 W × 15.35 H cm: 37.55 L × 36.16 W × 39 H

Find your model name and serial number

Model name: Find it on the rating label on the back of the multicooker base, near the power cord.

Serial number: The serial number is on the white sticker near the rating label.

⚠ WARNING

Read this manual carefully and completely and retain for future reference. Failure to adhere to safety instructions may result in serious injury or damage.

Table of contents

IMPORTANT SAFEGUARDS 2
Special cord set instructions 8
Product specifications 8
Find your model name and serial number 8
Product, parts and accessories 11
Top of pressure cooking lid 11
Bottom of pressure cooking lid 11
Air fryer lid 12
Multicooker base 13
Accessories 13
Get started 14
Initial set up 14
Is something missing or damaged? 14
Initial test run (water test) 15
Pressure cooking 101 17
(Behind the magic curtain) 17
Releasing pressure 18
Venting methods 18
Control panel 21
Status icons 22
Cooking progress bar 22
Status messages 23
Settings 23
Pressure control features (Your little bag of tricks!) 25
Pressure cooking lid 25
QuickCool™ 26
Quick release switch 26
Steam release assembly 27

Table of contents

Anti-block shield 28
Sealing ring 28
Float valve 29
Cooking with the pressure cooking lid 30
Pressure Cook 31
Slow Cook 33
Steam 34
Sous Vide 35
Keep Warm 38
Cooking without a lid 39
Sauté 39
Cooking with the air fryer lid 41
Using the air frying accessories 41
Air Fry, Roast and Bake 43
Cooking tips 45
Broil and Dehydrate 46
Care, cleaning and storage 47
Storing the air fryer lid 49
Removing and installing parts 50
Troubleshooting 53
Warranty 57
Contact 59

Product, parts and accessories

See **Care, cleaning and storage: Removing and installing parts** to find out how everything fits together.

Top of pressure cooking lid

Steam release assembly

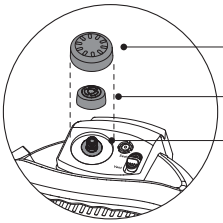

Steam release cover

Steam release valve

Steam release pipe

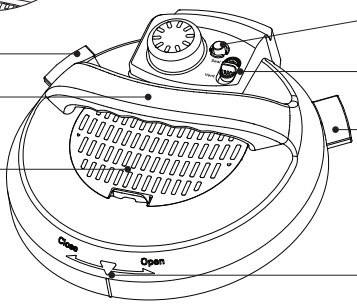

Float valve

Lid fin

Quick release switch

Lid handle

Lid fin

QuickCool™ protective cover

Lid position markers

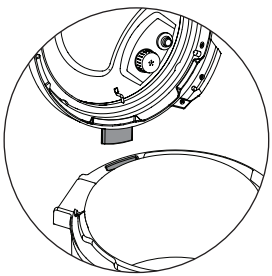

Instant Tip: Stand the pressure cooking lid up to keep it off your countertop. Insert the left or right lid fin into corresponding lid holders on the base to stand it up and save some space!

Bottom of pressure cooking lid

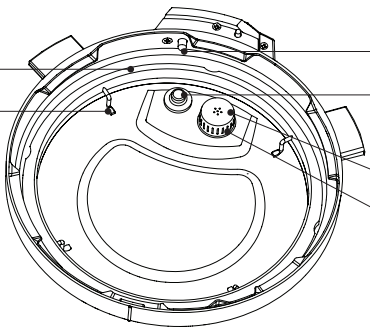

Sealing ring

Sealing ring rack

Locking pin

Silicone cap

(bottom of float valve)

Anti-block shield

Steam release pipe

(beneath the anti-block shield)

Illustrations in this document are for reference only and may differ from the actual product. Always refer to the actual product.

Product, parts and accessories

Air fryer lid

Top of air fryer lid

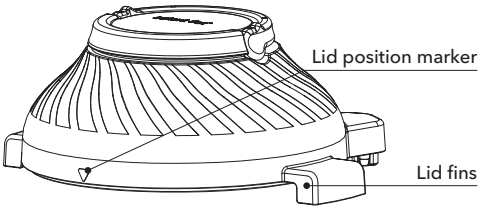

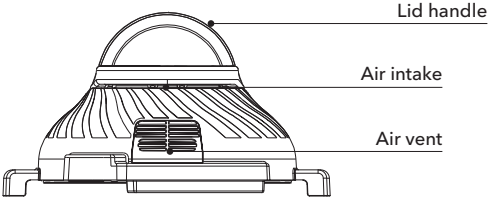

Bottom of air fryer lid

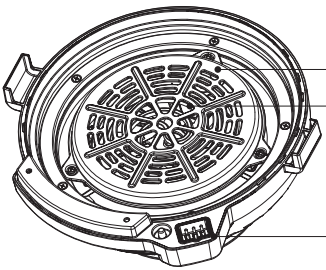

Inner pot

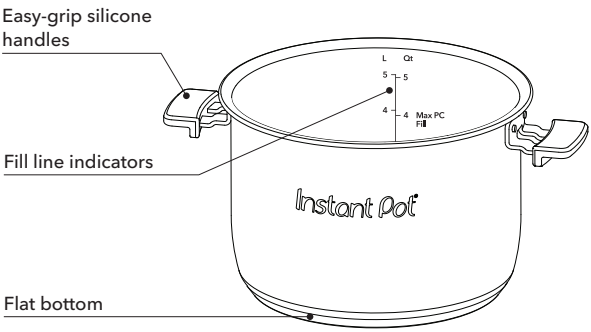

Instant Tip: Stovetop-friendly and oven-safe to 450°F! The inner pot features a cookware-grade impact bonded tri-ply bottom, which sounds complicated, but really just means you can use it just about anywhere – from the multicooker base to any electric, ceramic, gas or induction cooktop.

Illustrations in this document are for reference only and may differ from the actual product. Always refer to the actual product.

Product, parts and accessories

Multicooker base

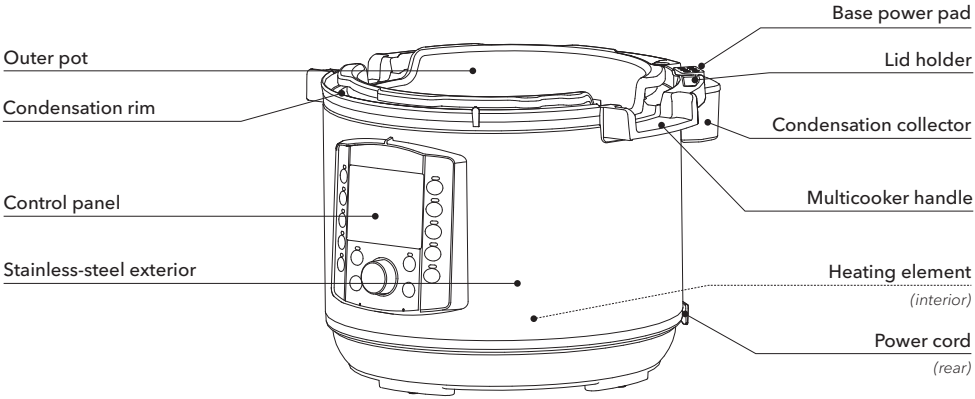

Accessories



Broil/dehydrating tray

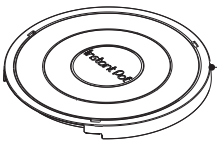

Protective pad and storage cover

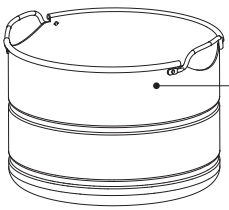

Multi-level air fryer basket

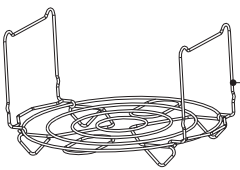

Multi-functional rack

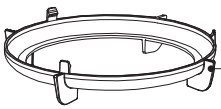

Air fryer basket base

Illustrations in this document are for reference only and may differ from the actual product. Always refer to the actual product.

Get started

Initial set up

You – yes, you – can do this! (It won't bite!)

"The only real stumbling block is fear of failure. In cooking you've got to have a what-the-hell attitude." – Julia Child

01 Pull that Instant Pot Pro Crisp out of the box. (If you haven't already!)

02 Remove the packaging material and accessories from in and around the multicooker and make sure all the parts are accounted for. See **Product, parts and accessories** for a full parts breakdown.

Make sure to check under the inner pot!

03 Wash the inner pot in a dishwasher or with hot water and dish soap. Rinse it well with warm, clear water and use a soft cloth to thoroughly dry the outside of the inner pot.

04 Wipe the heating element with a soft, dry cloth to make sure there are no stray packaging particles left in the multicooker base.

Don't remove the safety warning stickers from the lid (unless specified on the sticker!) or the identification label from the back of the multicooker base.

05 You may be tempted to put the Pro Crisp on your stovetop – *but don't do it*! Place the multicooker base on a stable, level surface, *away* from combustible material and external heat sources.

Is something missing or damaged?

Get in touch with a Customer Care Advisor through our chat widget at **instantpot.com/#chat**, by email at **support@instantpot.com** or by phone at **1-800-828-7280** and we'll happily make some magic happen for you!

Feeling keen?

- Check out **Product, parts and accessories** to get to know your Instant Pot's components, then read over **Pressure control features** for an in-depth look.
- While you're doing the **Initial test run (water test)**, read over **Pressure cooking 101** to find out how the magic happens!

⚠ CAUTION		
Read the **Important safeguards** before using the appliance. Failure to read and follow those instructions for safe use may result in damage to the appliance, property damage or personal injury.	Do not place the appliance on a stovetop or upon another appliance. Heat from an external source will damage the appliance.	To avoid risk of property damage and/or personal injury, do not place anything on top of the appliance, and do not cover or block the steam release assembly or anti-block shield, located on the appliance lid.

Get started

Initial test run (water test)

Do you *have* to do the water test? No – but getting to know the ins and outs of your new Pro Crisp prepares you for success in the kitchen! Take a few minutes to get to know how this baby works.

Stage 1: Setting up the Pro Crisp for pressure cooking

01 Remove the inner pot from the multicooker base and add 3 cups (750 mL / ~25 oz) of water to the inner pot, then insert it back into the base.

02 Connect the power cord to a 120 V power source.

The display shows **OFF**.

03 Place and close the pressure cooking lid as described in **Pressure control features: pressure cooking lid**.

The lid automatically seals for pressure cooking.

Stage 2: "Cooking" (…but not really, this is just a test!)

01 Select **Pressure Cook**.

02 Turn the dial to adjust the cook time to 5 minutes (**00:05**).

Press the dial to confirm the change, and go to the next field.

Leave the pressure level at **High**.

Customizations made to the cook time, temperature and pressure level are saved to the Smart Program when cooking begins.

03 Press **Start** to begin.

The display shows **On** and the cooking progress bar shows **Pre-heating**.

While the multicooker does its thing, read **Pressure cooking 101** to find out how the magic happens.

04 When the Smart Program ends, the multicooker begins **Keep Warm**.

Press **Cancel** to end Keep Warm and go back to standby.

Stage 3: Releasing pressure

01 Follow instructions for a Quick Release in **Releasing pressure: Venting methods**.

02 Wait for the float valve to drop, then carefully open and remove the lid as described in **Pressure control features: Pressure cooking lid**.

03 Using proper hand protection, remove the inner pot from the multicooker base, discard the water and thoroughly dry the inner pot.

That's it! You're good to go :)

Get started

⚠ DANGER
DO NOT attempt to remove the lid while the float valve is up and NEVER attempt to force the lid open. Contents are under extreme pressure. Float valve must be down before attempting to remove the lid. Failure to follow these instructions may result in serious personal injury and/or property damage

⚠ CAUTION	
Pressurized steam releases through the top of the steam release valve. Keep exposed skin away from the steam release valve to avoid burn injury.	The inner pot will be hot after cooking. Always use appropriate heat protection when handling a hot inner pot to avoid burn injury.

Pressure cooking 101

Pressure cooking uses steam to raise the boiling point of water above 100°C / 212°F. These high temperatures allow you to cook food way faster than normal.

(Behind the magic curtain)

When pressure cooking, the Instant Pot Pro Crisp goes through 3 stages.

Pre-heating

What you see	What you don't see	Tips
The cooking progress bar shows **Pre-heating**. The display shows **On**.	While the multicooker preheats, it vaporizes liquid to create steam. Once enough steam has built up, the float valve pops up and locks the lid in place.	The time it takes the multicooker to pressurize depends on things like food and liquid temperature and volume. Frozen foods have the longest pre-heating time. For the fastest results, thaw your food before cooking it. No need to hang around during this stage – trust that IP magic!

Cooking

What you see	What you don't see	Tips
The cooking progress bar moves over to **Cooking**. The display switches to the cooking countdown timer.	When the Instant Pot reaches the required pressure level, cooking begins. It automatically maintains the cooking pressure at **High** or **Low** pressure throughout cooking.	A higher pressure means a higher temperature. Smart Program settings (e.g., cooking time, pressure level, etc.) can be adjusted at any time during cooking.

Depressurization

What you see	What you don't see	Tips
If Keep Warm is on after cooking, the cooking progress bar moves over to **Keep Warm**, and the timer counts up from **00:00**. If not, the multicooker returns to standby and displays **End**.	Although food has finished cooking, the pressure cooker is still pressurized and hot. Venting the pressure lowers the temperature and allows you to safely remove the lid.	Follow your recipe instructions when choosing a venting method. See **Releasing pressure: Venting methods** on the next page for information on safe venting techniques. **Instant Tip**: The Instant Pot cools faster if Keep Warm is turned off!

Releasing pressure

You must release pressure after pressure cooking before attempting to open the lid.

Follow your recipe's instructions to choose a venting method, and always wait until the float valve drops into the lid before opening.

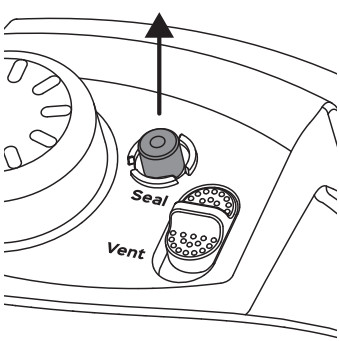

Pressurized

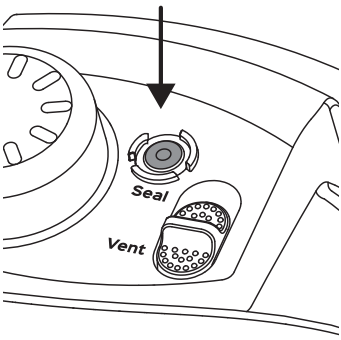

Depressurized

⚠ WARNING	
Steam ejected from the steam release valve is hot. **DO NOT** place hands, face, or any exposed skin over the steam release assembly when releasing pressure to avoid injury.	Do not cover or obstruct the steam release valve or cover to avoid injury and/or property damage.

⚠ DANGER
DO NOT attempt to remove the lid while the float valve is up and NEVER attempt to force the lid open. Contents are under extreme pressure. Float valve must be down before attempting to remove the lid. Failure to follow these instructions may result in serious personal injury and/or property damage.

Venting methods

- Natural Release (NR or NPR)
- Quick Release (QR or QPR)
- Timed Natural Release

Releasing pressure

Natural Release (NR or NPR)

Cooking stops gradually. As the temperature within the multicooker drops, the Instant Pot Pro Crisp depressurizes naturally over time.

What to do	What to expect
After cooking finishes, leave the quick release switch in the **Seal** position until the float valve drops into the lid. 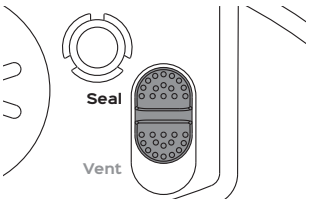 **Seal position**	Your meal continues to cook even after the Smart Program ends. Instant Tip: This is called "carryover cooking" or "resting", and it's great for large cuts of meat. The depressurization time may vary based upon the volume, type and temperature of food and liquid. Unless you use QuickCool™ technology, NR can take up to 40 minutes with some dishes, so plan ahead – it's well worth the wait! See **QuickCool** to find out how to naturally release pressure faster than ever before!

NOTICE
Use NR to depressurize the multicooker after cooking high-starch foods (like soups, stews, chilis, pasta, oatmeal and congee) or after cooking foods that expand when cooked (like beans and grains).

Quick Release (QR or QPR)

Stops cooking quickly and prevents overcooking. Perfect for quick-cooking vegetables and delicate seafood!

What to do	What to expect
Move the quick release switch from **Seal** to **Vent** and wait until the float valve drops into the lid. 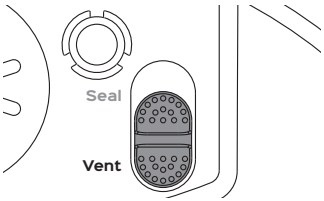 **Vent position**	When the steam release cover is installed properly, you'll hear a muffled hiss as steam hits the cover and disperses. If the cover is not installed properly, a loud jet of steam will eject through the top of the steam release valve.

Releasing pressure

NOTICE
Do not use QR when cooking fatty, oily, thick or high-starch foods (e.g., stews, chilis, pasta and congee) or when cooking foods that expand when cooked (e.g., beans and grains).

Timed Natural Release

The carryover cooking continues for a specific amount of time, then stops quickly when you release the remaining pressure. Perfect for cooking rice and grains.

What to do	What to expect
Leave the quick release switch in the **Seal** position for a few minutes (according to your recipe) then move it from **Seal** to **Vent** and wait until the float valve drops into the lid.	When the steam release cover is installed properly, you'll hear a muffled hiss as steam hits the cover and disperses. If the cover is not installed properly, a loud jet of steam will eject through the top of the steam release valve. The temperature within the multicooker drops, so the steam release may not be as powerful as a normal QR.

If you see a lot of spatter while releasing pressure, move the quick release switch back from **Vent** to **Seal**, and wait a few minutes before trying to release pressure again. If spatter continues, use NR to safely release the remaining pressure.

⚠ CAUTION
Steam ejected from the steam release valve is hot. DO NOT place hands, face, or any exposed skin over the steam release assembly when releasing pressure to avoid injury.

Control panel

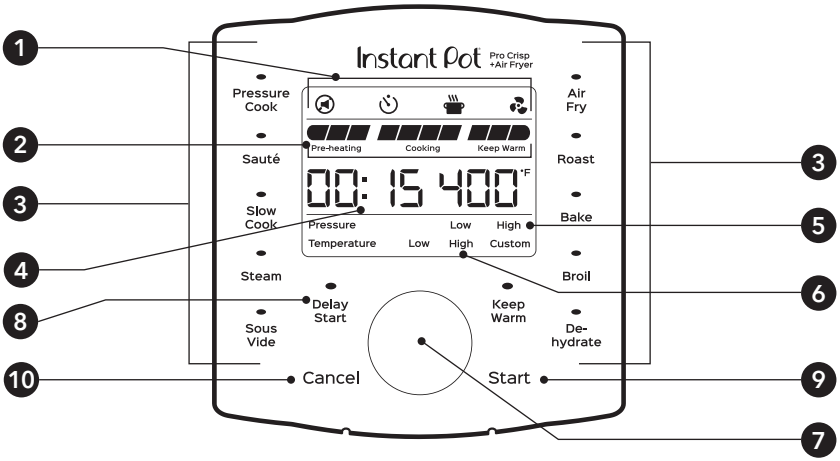

1	**Status icons**	Shows the status of various settings. See **Control panel: Status icons** for details.	
2	**Cooking progress bar**	Shows when the multicooker is in Pre-heating, Cooking, or Keep Warm. See **Control panel: Cooking progress bar** for details.	
3	**Smart Programs**	**Pressure cooking lid** • Pressure Cook • Slow Cook • Sauté • Sous Vide • Steam	**Air fryer lid** • Air Fry • Roast • Bake • Broil • Dehydrate
4	**Timer**	Shows the time in HH:MM format. Counts up or down, depending on the Smart Program. Also displays temperature in °C (Celsius) or °F (Fahrenheit) during Sous Vide.	
5	**Pressure**	Choose between Low and High.	
6	**Temperature**	Choose between Low, High and Custom.	
7	**Control dial**	Turn the dial to scroll through Smart Programs, modify status icons, and adjust the time, temperature, and pressure levels. The dial is also a button. Press the dial to confirm your selections.	
8	**Delay Start**	Delay the start of cooking. Doubles as a kitchen timer!	
9	**Start**	Begins the selected Smart Program.	
10	**Cancel**	Stops a Smart Program at any time and returns the multicooker to standby.	

Control panel

Status icons

Sound is on.

Sound is off.

Delay Start is running.

Appears when Keep Warm is running, or is set to turn on after cooking finishes.

An air frying Smart Program has been selected.

Cooking progress bar



When a Smart Program starts, the cooking progress bar blinks to show that **Pre-heating** is in progress. The display shows **On** during the pre-heating stage to let you know that it's working on it!



When the Pro Crisp reaches the set pressure level or temperature, the progress bar blinks to show that **Cooking** has begun. The display counts down the cooking time, and highlights the selected pressure or temperature level.



If Keep Warm is on when cooking finishes, the progress bar moves over to **Keep Warm** and the timer counts up the elapsed time to a maximum of 10 hours (**10:00**). When Keep Warm completes, the display shows **End**.

If Keep Warm is off when cooking finishes, the multicooker returns to standby and the display shows **End**.

Control panel

Status messages

	Standby mode – the Pro Crisp awaits your commands!
	The Pro Crisp is in the **Pre-heating** stage.
	The display shows **Hot** when the Pro Crisp reaches the perfect temperature during Sauté. After the message disappears, the timer starts counting the cooking time.
	Display shows one of the following: • The **Cooking** time countdown, • How long is left on **Delay Start** before cooking begins, • How long food has been **keeping warm** after cooking finishes.
	When cooking finishes, the display shows **End**.

Do you see something else? See **Troubleshooting** for more information.

Settings

Setting	Description
Turn sound on or off.	When in standby, press and hold the dial until the sound icon blinks, then turn the dial to toggle the sound on and off. Press the dial to confirm your choice. Audible safety and error message alerts cannot be turned off.
Change displayed temperature (°C and °F).	Select **Sous Vide**, or **any program that uses the air fryer lid**, then press and hold the dial until the temperature unit flashes. Turn the dial to toggle between °**C** and °**F**, then press the dial to save the change.

Control panel

<table>
<tr><th>Setting</th><th>Description</th></tr>
<tr><td>Adjust and save custom cooking times and temperatures.</td><td>Once a Smart Program is selected, changes to the cooking time, temperature and pressure level are saved once the Smart Program begins.</td></tr>
<tr><td>Delay the start of cooking.</td><td>
<table>
<tr><th>Default time</th><th>Time range</th></tr>
<tr><td>6 hours (06:00)</td><td>10 minutes to 24 hours
(00:10 to 24:00)</td></tr>
</table>
You can use Delay Start with:
• Pressure Cook
• Slow Cook
• Stream
Select a Smart Program and set up Delay Start any time before pressing Start:
01 Press Delay Start, then turn the dial to adjust the length of time you want to delay cooking.
02 Press the dial to confirm and go back to the Smart Program.
03 Press Start to begin.
</td></tr>
<tr><td>Reset an individual Smart Program.</td><td>When in standby, press and hold the Smart Program button you want to reset for 5 seconds.
The Smart Program's pressure level, cooking time and temperature are restored to the factory default setting, and the multicooker goes back to standby.</td></tr>
<tr><td>Reset all Smart Programs.</td><td>When in standby, press and hold Cancel until the multicooker beeps.
All Smart Program pressure levels, cooking times and temperatures are restored to factory default settings.</td></tr>
</table>

Pressure control features (Your little bag of tricks!)

See **Care, cleaning and storage** for installation and removal of parts.

Pressure cooking lid

What we love about it	What you should know about it
When you close the lid (over the handles on the new inner pot!), it automatically sets to **Seal** for *seriously* easy pressure cooking. The lid handle is comfortable to use whether you're left or right-handed, and, stands up in the multicooker base! When it's plugged in, the Pro Crisp plays a little jingle when you open and close the lid :)	The lid is removable during non-pressure cooking so you can taste-test as you go. When pressure cooking, the lid only locks into place once the multicooker has pressurized. Try not to remove the lid unnecessarily!

Removing the lid

01 Grip the lid handle and turn it counter-clockwise to align the symbol on the lid ▼ with the symbol on the rim of the multicooker base ▮.

02 Lift the lid up and off the multicooker base towards your body.

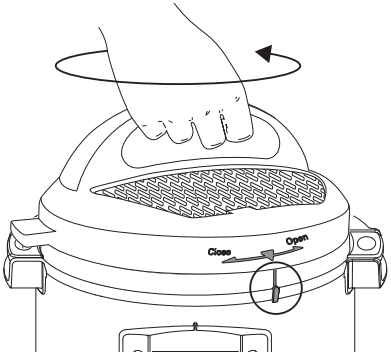

See **Releasing pressure: Venting methods** for safe depressurization techniques.

Closing the lid

01 Align the symbol on the lid ▼ with the symbol on the multicooker base ▮, then lower the lid onto the track.

02 Turn the lid clockwise until the symbol on the lid ▼ aligns with the middle of the control panel.

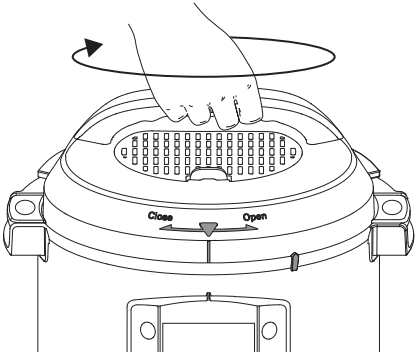

Illustrations in this document are for reference only and may differ from the actual product. Always refer to the actual product.

Pressure control features

QuickCool™

For the fastest Natural Release after pressure cooking, use the QuickCool tray*.

What we love about it	What you should know about it
It's a huge timer saver – you can release pressure naturally up to 50% faster!	The metal portion of the lid gets **extremely** hot, so don't remove the protective cover unless you're using QuickCool.

To use the QuickCool tray, fill it with ice or water and freeze it. Once frozen, remove the protective cover from the pressure cooking lid, and position the QuickCool tray on the exposed metal of the lid.

When the float valve to drops into the lid, remove the QuickCool tray, discard the water and open the lid. Use caution when removing the tray as some or all of the ice may have melted.

*QuickCool tray sold separately at **store.instantpot.com**.

⚠ CAUTION

The lid will be hot during and after cooking. Do not touch the exposed metal with bare skin to avoid injury.

Quick release switch

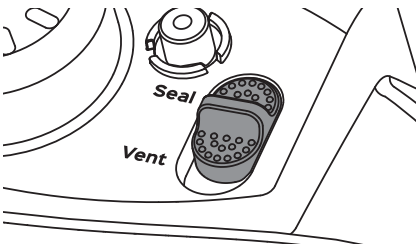

The quick release switch controls the steam release valve – the part that releases pressure.

What we love about it	What you should know about it
It's *super* easy to use, and keeps our hands far away from the steam when the multicooker is releasing pressure!	It automatically sets to **Seal** when you close the lid, so make sure to move it to **Vent** when you're not pressure cooking.

Pressure control features

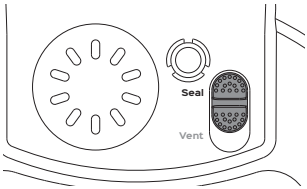

Seal Position

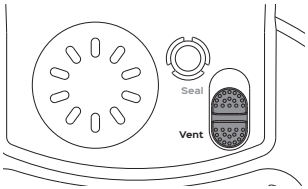

Vent Position

See **Releasing pressure: Venting methods** for safe depressurization techniques.

Steam release assembly

The steam release assembly must be fully installed before use.

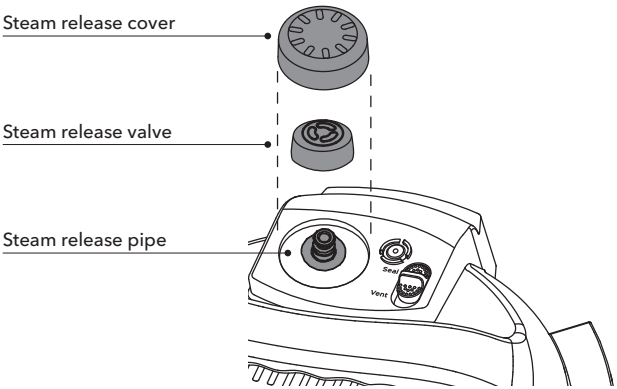

What we love about it	What you should know about it
When the valve's a-venting, the steam release cover disperses the steam, so the quick release of pressure is soft and gentle.	When releasing pressure, steam travels up from the inner pot, through the steam release pipe and out from the top of the steam release valve – so it's important to keep the area clean and clear. The steam release valve sits loosely on the steam release pipe.

⚠ WARNING

Do not cover or block the steam release assembly in any way to avoid injury and/or property damage.

Pressure control features

Anti-block shield

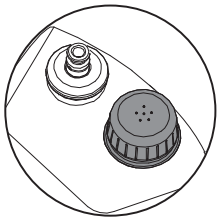

The anti-block shield prevents food particles from coming up through the steam release pipe, which assists with pressure regulation.

The anti-block shield is integral to product safety and necessary for pressure cooking, so it must be installed before use.

Sealing ring

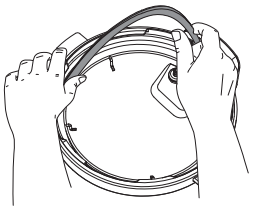

When the pressure cooking lid is closed, the sealing ring creates an air-tight seal between the lid and the inner pot.

The sealing ring must be installed before use.

Only one sealing ring should be installed in the lid at a time.

Instant Tip: Silicone is porous, so it absorbs strong aromas and certain flavors. Keep extra sealing rings on hand to limit the transfer of those aromas and flavors between dishes. Visit our store to start color coding your cooking!

⚠ CAUTION

Always check for cuts, deformation and correct installation before cooking, as sealing rings stretch over time with normal use. If you notice stretching, deformation, or damage to your sealing ring, DO NOT use it.

Replace the sealing ring every 12 to 18 months or sooner, and only use authorized Instant Pot sealing rings.

Failure to follow these instructions may cause food to discharge, which may lead to personal injury or property damage.

Pressure control features

Float valve

The float valve lets you know when there is pressure in the multicooker (pressurized) or not (depressurized). It appears in 2 positions:

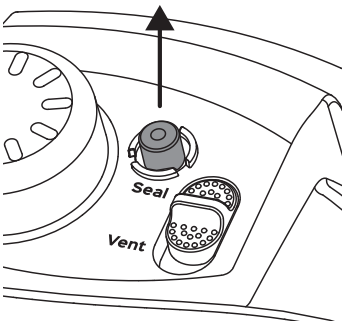

Pressurized
The float valve has visibly popped up above the surface of the lid.

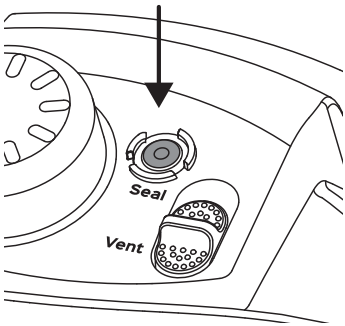

Depressurized
The float valve has descended, and the top is flush with the lid.

The float valve and silicone cap work together to seal in pressurized steam. These parts must be installed before use. Do not attempt to operate the Instant Pot without the float valve properly installed. **Do not touch the float valve during use.**

⚠ DANGER

DO NOT attempt to remove the lid while the float valve is up and NEVER attempt to force the lid open. Contents are under extreme pressure. Float valve must be down before attempting to remove the lid. Failure to follow these instructions may result in serious personal injury and/or property damage.

Cooking with the pressure cooking lid

The Instant Pot Pro Crisp is amazingly versatile in the kitchen. No matter what kind of cooking you want to do, the Pro Crisp has your back!

You can even make changes to the cooking time, pressure level and temperature after a program has started. Just push the dial to enter the adjustment fields and make any changes you need, then press **Start**.

⚠ WARNING	
DO NOT fill inner pot higher than the **Max PC Fill** line as indicated on the inner pot to avoid personal injury and/or property damage. When cooking foods that expand (e.g., rice, beans, pasta) do not fill the inner pot higher than the **Half Fill** line as indicated on the inner pot.	Always cook with the inner pot in place. DO NOT pour food or liquid into the multicooker base. To avoid risk of personal injury and/or property damage, place food and liquid ingredients in the inner pot, then insert the inner pot into the multicooker base.

⚠ CAUTION

The inner pot and accessories will be hot during and after cooking. Always use appropriate hand protection when adding to or removing food from a hot inner pot to avoid injury and/or property damage.

⚠ CAUTION

Always inspect the **lid** and **inner pot** carefully to make sure they are clean and in good working condition before use.

- To avoid personal injury or damage to the appliance, replace the inner pot if it is dented, deformed or damaged.
- Use only authorized Instant Pot inner pots made for this model when cooking.

Always make sure the heating element is clean and dry before inserting the inner pot into the multicooker base.

Failure to follow these instructions may damage the multicooker. Replace damaged parts to make sure safe function.

Cooking with the pressure cooking lid

Pressure Cook

Use steam pressure to cook food quickly, evenly, and deeply, for delicious results every single time.

Pressure level	Suggested use	Notes
Low 5.0 – 8.0 psi (35 – 55 kPa)	Fish and seafood, soft vegetables and rice.	When pressure cooking, the pressure level controls the cooking temperature. Higher pressure = higher temperature!
High 9.4 – 12.3 psi (65 – 85 kPa)	Eggs, meat, poultry, root vegetables, oats, beans, grains, bone broth, stew, chili.	

Pressure cooking liquids should be water-based, like broth, stock, soup or juice. If you're using canned, condensed or cream-based soup, add liquid as directed below.

Instant pot size	Minimum liquid for pressure cooking*
8 Quarts / 7.6 Litres	2 cups (500 mL / ~16 oz)

*Unless otherwise specified in recipe.

Always make sure to place food and liquid ingrdients into the stainless-steel inner pot, and NOT directly in the multicooker base!

⚠ CAUTION

To avoid scorching or scalding injury, be cautious when pressure cooking with more than 1/4 cup (60 mL / ~2 oz) oil, oil-based sauces, condensed cream-based soups, and thick sauces. Add suitable liquid to thin sauces. Avoid recipes that call for more than 1/4 cup (60 mL / ~2 oz) of oil or fat content.

Cooking with the pressure cooking lid

Jump start magic!

For best results, always follow an authorized **Instant Pot recipe** or the tried, tested and true **pressure cooking timetables**.

Time range	Default time	Default pressure
0 minutes to 8 hours (**00:00** to **08:00**)	35 minutes (**00:35**)	High

Stage 1: Setting up the Pro Crisp for pressure cooking

01 Add liquid and food to the inner pot as indicated in your recipe.

Instant Tip: Use the multi-functional rack to help heat food evenly, prevent nutrients from leeching into the cooking liquid, allow oil and grease to drip off the food, and prevent food from scorching the bottom of the inner pot.

02 Insert the inner pot into the multicooker base.

03 Place and close the pressure cooking lid as described in **Pressure control features: Pressure cooking lid**.

Stage 2: Pressure cooking

01 Select **Pressure Cook**.

02 Press the dial to select the default time, or, turn it to adjust the cooking time.

Press the dial to confirm the change and go to the next field.

03 Press the dial to select the default pressure level, or, turn it to toggle between **High** and **Low** pressure.

Press the dial to confirm your choice.

04 Leave the automatic Keep Warm setting on, or press **Keep Warm** any time to turn it off.

05 Press **Start** to begin. The display shows **On** and the cooking progress bar shows **Pre-heating**.

Read **Pressure Cooking 101** to get a glimpse behind the curtain and find out what's going on in that big ol' magic pot.

06 When the Smart Program finishes the display shows **End** if Keep Warm is turned off.

If not, the timer begins counting from **00:00** up to 10 hours (**10:00**).

Food should not be kept warm for more than 10 hours. If cooking thick or starchy foods, heat may not dissipate evenly. To ensure food safety, stir the contents of thicker dishes every 40 to 60 minutes.

07 Follow your recipe instructions to depressurize the multicooker. See **Releasing pressure: Venting methods** for safe venting techniques.

A delay start timer can be set to automatically start pressure cooking while you're in bed, working, running errands or busy with other dishes. To set a delay start timer, see **Control panel: Settings**.

Cooking with the pressure cooking lid

Slow Cook

Use Slow Cook for easy homemade one-pot meals. Make mac 'n' cheese, fall-off-the-bone ribs and pull-apart pork carnitas with the touch of a button.

Temperature level	Suggested use	Notes
Low	For that low and slow, all-day kind of cooking. Set for at least 6 hours (**06:00**) for best results.	You can use the pressure cooking lid, or, if you want to watch your food while it cooks, any glass lid with a venting hole will do the job. Visit **our store** for accessories! Dishes should cook for at least 3 hours (**03:00**) unless otherwise stated in your recipe.
High	Low and slow cooking, but a little bit faster.	

Instant Tip: This Smart Program's two heat settings are comparable to a traditional slow cooker so you can keep making all your family favorites!

Default time	Time range	Default temperature
4 hours (**04:00**)	30 minutes to 24 hours (**00:30** to **24:00**)	High

Stage 1: Setting up the Pro Crisp for slow cooking

01 Add food and liquid ingredients to the inner pot according to your recipe.

02 Insert the inner pot into the multicooker base.

03 Place and close the pressure cooking lid as described in **Pressure control features: Pressure cooking lid**.

04 Move the quick release switch to the **Vent** position.

Stage 2: Slow cooking

01 Select **Slow Cook**.

02 Press the dial to select the default time, or, turn it to change the cooking time.

Press the dial to confirm the change and go to the next field.

03 Press the dial to select the default temperature level, or, turn it to toggle between **High** and **Low** temperatures.

Press the dial to confirm your choice.

04 Leave the automatic Keep Warm setting on, or press **Keep Warm** any time to turn it off.

Cooking with the pressure cooking lid

05 Press **Start** to begin. The progress bar shows **Pre-heating** and the timer starts counting down immediately.

06 When the Pro Crisp reaches the target temperature the progress bar moves over to **Cooking**.

07 When the Smart Program finishes the display shows **End** if Keep Warm is turned off. If not, the timer begins counting from **00:00** up to 10 hours (**10:00**).

A delay start timer can be set to automatically start slow cooking while you're reading, gardening, working out, or busy with other dishes. To set a delay start timer, see **Control panel: Settings**.

NOTICE

The float valve should not rise during Slow Cook. The lid is removable throughout the cooking process for easy access. If the float valve rises, make sure the quick release switch is set to **Vent**. See **Releasing pressure: Venting methods** for safe venting techniques.

Steam

The Steam program works like a regular stovetop steamer, boiling liquid in the inner pot to cook food with hot steam. When steaming, use the multi-functional rack to keep food out of the boiling liquid.

Default time	Time range	Default temperature
30 minutes (**00:30**)	1 minute to 30 minutes (**00:01** to **00:30**)	100°C 212°F **Not adjustable**.

Stage 1: Setting up the Pro Crisp for steaming

01 Add up to 3 cups (750 mL / ~25 oz) of water to the inner pot.

02 Place the multi-functional rack or a steamer basket on the bottom of the inner pot, then place your food ingredients on the accessory.

03 Insert the inner pot into the multicooker base.

04 Use a glass lid, or place and close the pressure cooking lid as described in **Pressure control features: Pressure cooking lid**.

05 If using the pressure cooking lid, move the quick release switch to the **Vent** position.

Cooking with the pressure cooking lid

Stage 2: Steaming

01 Select **Steam**.

02 Press the dial to select the default time, or, turn it to change the cooking time.

Press the dial to confirm the change.

03 Press **Start** to begin. The display shows **On** and the cooking progress bar shows **Pre-heating**.

04 When the Pro Crisp reaches the target temperature the progress bar moves over to **Cooking** and the timer counts down.

05 If the ingredients finish cooking before the time runs out, press **Cancel** to end the Smart Program. Otherwise, when the Smart Program finishes the display shows **End** if Keep Warm is turned off. If not, the timer begins counting from **00:00** up to 10 hours (**10:00**).

Keep Warm is not programmed to come on automatically when Steam finishes, but you can turn automatic warming on any time by pressing **Keep Warm**.

A delay start timer can be set to automatically start steaming while you're painting, party planning, scrolling through the **Official Instant Pot Facebook Community**, or busy with other dishes. To set a delay start timer, see **Control panel: Settings**.

NOTICE

The float valve should not rise during Steam. The lid is removable throughout the cooking process for easy access. If the float valve rises, make sure the quick release switch is set to **Vent**. See **Releasing pressure: Venting methods** for safe venting techniques.

NOTICE

If there is steam in the inner pot, you may notice some resistance when re-placing the pressure cooking lid. Allow it to settle into the track completely before closing and remember to re-set the steam release switch to **Vent**.

Sous Vide

Sous vide cooking involves cooking food underwater in an air-tight, food-safe bag, for a long period of time. Food gets to cook in its own juices and comes out juicy, flavorful and unbelievably tender.

Default time	Time range	Default temperature	Temperature range
3 hours (**03:00**)	30 minutes to 99 hours and 30 minutes (**00:30** to **99:30**)	60°C 140°F	25 to 77°C 95 to 203°F

Cooking with the pressure cooking lid

You'll need:

- Tongs
- Thermometer
- Food safe, airtight, re-sealable food pouches, or,
- Vacuum sealer and food-safe vacuum bags

Step 1: Setting up the sous vide water bath

01 Fill the inner pot with water to the **Half Fill** mark as indicated on your inner pot, then insert the it into the multicooker base.

02 Place and close the pressure cooking lid as described in **Pressure control features: Pressure cooking lid**.

03 Move the quick release switch to the **Vent** position.

Stage 2: Setting up the Pro Crisp for sous vide cooking

01 Select **Sous Vide**.

02 Press the dial to select the default time, or, turn it to adjust the cooking time.

Press the dial to confirm the change and go to the next field.

03 Press the dial to select the default temperature, or, turn it to adjust the water bath temperature.

Press the dial to confirm the change.

04 Press **Start** to begin heating the water bath. The display shows **On** and the progress bar shows **Pre-heating**.

Stage 3: Get food ready

01 While the water heats, season your food as desired. See **Ingredients and seasonings** on the next page for tips!

02 When you're ready, separate each serving of food into individual pouches.

03 Remove all air from the pouches and seal them tightly.

Stage 4: Cook 'em up!

01 Once the water bath is ready, the display switches over to the countdown timer.

02 Remove the lid and carefully immerse the sealed pouches.

The food in the pouches should be submerged, so add heated water to the inner pot any time it's needed. If you're using a re-sealable bag, make sure the seal stays above water.

03 Place and close the pressure cooking lid as described in **Pressure control features: Pressure cooking lid**.

04 Move the quick release switch to the **Vent** position.

05 When the Smart Program finishes the display shows **End**. Open the multicooker and use your tongs to carefully remove the pouches from the hot water.

06 Open the pouches and use a thermometer to check for doneness.

⚠ CAUTION

Do not overfill the inner pot to avoid damage to the multicooker. Total contents (water *and* food pouches) should leave at least 2" (5 cm) of headspace between the water line and the brim of the inner pot.

Cooking with the pressure cooking lid

Reverse Searing

Searing meat after low and slow cooking is the easiest way to boost those already-delicious flavors through the roof *without* overcooking. Try reverse searing for tender, juicy meat with a beautiful burnished crust.

01 After sous vide cooking, remove the meat from the cooking pouch and gently pat it dry to remove as much moisture from the surface of the meat as you can.

It may seem counterintuitive, but don't skip this step – you'll end up with more flavor and a great-looking finish!

02 Empty the inner pot, then place it back into the multicooker base.

03 Use the Pro Crisp's Sauté program to give your meal a good high-heat sear, or, use a cast iron pan, browning torch, or a grill – anything hot to lock in that moisture!

04 Cover your meat with foil and let it rest for 5-20 minutes, depending on its size.

Ingredients and Seasonings

- Salt goes a long way when it's trapped in an air-tight bag, so it's better to use a little less than you normally would, especially with meats, poultry and fish. If you find it needs more after cooking, salt to taste!
- Use high quality, fresh ingredients when cooking sous vide to ensure the best possible flavor, except…
- Use garlic powder rather than raw garlic. Raw garlic can become *really* bitter and overpowering when cooked sous vide. Pure, high-quality garlic powder will give you the best results.

Instant Tip: Don't use garlic salt in place of garlic powder!

Storing cooked food

If you're not going to eat right away, plunge the unopened pouches into ice water to reduce the temperature quickly, then keep them refrigerated until you're ready.

Check out the **sous vide cooking times** online!

⚠ CAUTION

When cooking meat, always use a meat thermometer to ensure the internal temperature reaches a safe minimum temperature. Refer to the USDA's **Safe Minimum Internal Temperature Chart** or Health Canada's **Cooking Temperatures Chart** for more information.

Cooking with the pressure cooking lid

Keep Warm

Perfect to reheat meals or warm food for long periods of time.

Default time	Time range	Default temperature	Temperature range
10 hours (**10:00**)	30 minutes to 10 hours (**00:30** to **10:00**)	High	High Low Custom: 25 to 90°C 77 to 194°F

01 Press **Keep Warm**.

02 Press the dial to select the default time, or, turn it to adjust the warming time.
Press the dial to confirm the change and go to the next field.

03 Press the dial to select the default temperature, or, turn it to toggle between **High**, **Low** and **Custom** temperature levels.

Custom: Press the dial to select the default temperature or turn the dial to adjust the temperature, then press it to confirm the change.

04 When Keep Warm completes, the display shows **End**.

⚠ CAUTION

Thicker foods may prevent even heating, which can lead to spoiled food if left unattended. When cooking thick foods like stew and chili, stir the contents of the inner pot every 40 to 60 minutes to make sure that heat is evenly distributed.

Cooking without a lid

Sauté

Similar to using a frying pan, griddle or flat-top grill, use Sauté to simmer, reduce and thicken liquids, stir-fry meals, and to caramelize vegetables and sear meat before *or* after using other cooking methods. Never use a lid when using **Sauté**.

Instant Tip: If you prefer, you can use the inner pot on any electric, ceramic, gas, or induction cooktop. The silicone-grip handles make it easy to hold on to and stir without slipping!

Default time	Time range	Default temperature	Temperature range
30 minutes (**00:30**)	1 minute to 1 hour (**00:01** to **01:00**)	High	High Low Custom: Levels 1-6

Stage 1: Setting up the Pro Crisp for sautéing

01 Insert the inner pot into the multicooker base. **Do not use a lid**.

02 Press **Sauté**.

03 Press the dial to select the default time, or, turn it to adjust the cooking time.

Press the dial to confirm the change and go to the next field.

04 Press the dial to select the default temperature level, or, turn it to toggle between **High**, **Low** and **Custom** temperature levels.

Press the dial to confirm your choice.

There are 6 levels of Custom temperatures to choose from, shown as **LE 1** (the lowest temperature) through **LE 6** (the highest temperature). These levels are similar to the temperature levels on your stovetop.

To choose a custom temperature level, select **Custom**, then turn the dial to your preferred level and press the dial to confirm your choice.

05 Press **Start** to begin. The display shows **On** and the cooking progress bar shows **Pre-heating**.

Stage 2: Sautéing

01 When the Pro Crisp reaches the target temperature the progress bar moves over to **Cooking** and the display shows **Hot** for a few moments before switching over to the countdown timer.

02 Add ingredients to the inner pot.

If your food ingredients are added before the inner pot has reached the target temperature, the Hot message may not appear. This is normal.

03 If the ingredients finish cooking before the time runs out, press **Cancel** to end the Smart Program, otherwise, when the Smart Program finishes the display shows **End**.

Delay Start and automatic Keep Warm cannot be used with Sauté.

Cooking without a lid

Deglazing

Sautéing meat and vegetables before pressure cooking is the perfect way to boost flavors, as sugars caramelize from the high heat of the Sauté Smart Program. Deglazing the inner pot lets you unlock those flavors in amazing sauces, gravies and more.

To deglaze, remove food items from the inner pot and add a thin liquid, like water, broth, or wine to the hot surface. Use a wooden or silicone scraper to lift up any food stuck to the bottom of the inner pot and stir it into the liquid.

⚠ WARNING

The Sauté Smart Program reaches high temperatures. If left unmonitored, food may burn on this setting. DO NOT use a lid and DO NOT leave the multicooker unattended while using Sauté.

Cooking with the air fryer lid

When cooking with the air fryer lid, you will have to lift it off the multicooker base occasionally. Always make sure to place the hot lid on the protective pad provided, not directly on your counter.

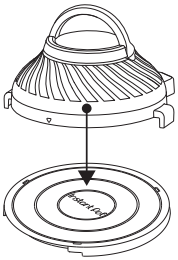

Place hot lid on cover

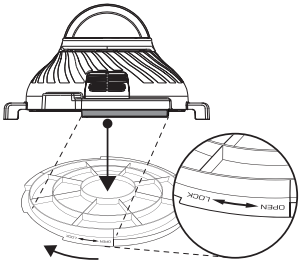

Flip it over to store

Using the air frying accessories

The **multi-functional rack** can be positioned two ways:

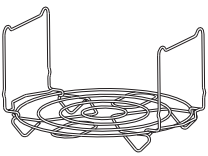

The regular position for pressure cooking and steaming most food items.

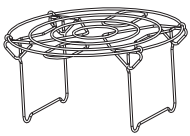

Use the rack in this position when you want your food to cozy-up to the air fryer lid's heating element.

The **multi-level air fryer basket** is perforated to help give your food a delicious all over crisp, and should be used for most air fried foods, like wings, nuggets and cauliflower bites.

You can get different results by changing the air flow in the inner pot.

Do this…	And get something like this!
Place food directly in the inner pot for cooking.	Golden and crispy on top, but because the air can't flow beneath the food, juices from cooking may cause the bottom to retain a soggy texture. Great for chicken, less ideal for spring rolls!
Place food on the bottom of the multi-level air fryer basket.	Golden and crispy on the top and sides. Juices from cooking drip off so the bottom crisps up.

Cooking with the air fryer lid

Do this…	And get something like this!
Place food on the bottom of the multi-level air fryer basket, then cover with the broil/dehydrating tray.	The air flow is diverted, so you will get less crisp. Great for dehydrating!
Place food on the broil/ dehydrating tray in the multi-level air fryer basket.	Your food gets up close and personal with the heating element and crisps a lot faster. Perfect for melting cheese or giving your meal that golden finishing touch.

Instant Tip: Don't crowd the multi-level air fryer basket or the broil/dehydrating tray. Air must be able to circulate freely around food to cook and crisp properly.

Assemble the multi-level air fryer basket

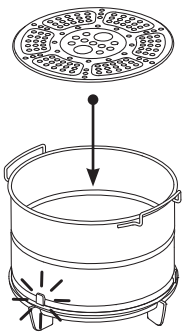

01 Place the air fryer basket base on a stable surface.

02 Position the multi-level air fryer basket over the base and press down firmly. The teeth on the base should pop into the groove on the outside of the basket.

03 If you want to use the broil/dehydrating tray, insert it into the multi-level air fryer basket with the smooth side up.

Instant Tip: To easily maneuver the broil/dehydrating tray, lift it with two fingers from the large holes in the middle of the tray. To prevent personal injury, make sure to only handle the accessories when they are cool.

⚠ CAUTION	
Do not overfill the inner pot or accessories. To prevent risk of fire, damage, and/or personal injury, ensure that food does not contact the heating element or the element cover.	The inner pot and accessories will be hot during and after cooking. To avoid injury, do not touch the hot inner pot or accessories with unprotected hands.

NOTICE
If the **Food burn** error appears while using the air fryer lid, deglaze the bottom of the inner pot as necessary, according to **Sauté** instructions.

Cooking with the air fryer lid

Air Fry, Roast and Bake

Using the air fryer lid is an amazing way to ramp up your meal's flavor and texture.

Whether you want to pressure cook first and use the air fryer lid to crisp up your dish, or if you'd prefer to cook your meal just using the air fryer lid – you can!

Always make sure to place ingredients into the stainless-steel inner pot when using the air fryer lid.

The presets are a helpful starting point that you can experiment with. Smart programs save the adjustments you make, so your new favorites are always available with one button!

Smart program	Default time	Time range	Default temperature	Temperature range
Air Fry	18 minutes (**00:18**)	1 minute to 1 hour (**00:01** to **01:00**)	204°C 400°F	82 to 232°C 180 to 450°F
	Air frying is an amazing way to bring out a lot of flavor using only a little oil. Crisp up previously cooked dishes or use the Air Fryer Lid to cook a dish from start to finish. Ideal for fresh or frozen fries, chicken wings, shrimp and more.			
Roast	40 minutes (**00:40**)	1 minute to 1 hour (**00:01** to **01:00**)	193°C 380°F	82 to 232°C 180 to 450°F
	Give your roast a beautiful crust, crisp up poultry skins, or give your vegetables a golden exterior. Great for beef, lamb, pork, poultry, vegetables and more.			
Bake	30 minutes (**00:30**)	1 minute to 1 hour (**00:01** to **01:00**)	185°C 365°F	82 to 232°C 180 to 450°F
	Like a tiny oven, the Bake Smart Program can be used to create decadent brownies, fluffy cakes, pastries, buns and much more. You can bake cakes within the multi-level air fryer basket or any oven-safe baking dish, like a springform pan. Place your baking dish on the multi-functional rack when cooking. Unless specified in your recipe, don't cover the batter when baking.			

Depending on your recipe, you can use the multi-functional rack or any oven-safe cookware to cook or crisp your meal, or, you can place food right in the inner pot. Just make sure you always have the stainless-steel inner pot inserted first!

Cooking with the air fryer lid

When baking cake…	
…in the **multi-level air fryer basket**, line the inside with aluminum foil or parchment paper then pour in the loose batter.	…in a **baking dish** like a springform pan, place the multi-functional rack on the bottom of the inner pot, then place the baking dish on the rack in the inner pot. Leave approximately 1"/ 2.5 cm of space around all sides of the baking dish to allow heat to circulate evenly.

Stage 1: Setting up the Pro Crisp for cooking

01 Insert the inner pot into the multicooker base.

02 Place the air fryer lid on the cooker base by lining up the lid fins over the inner pot handles.

Press the lid down to ensure the power pins on the lid make full contact with the power pad on the multicooker base.

03 Select a Smart Program: **Air Fry**, **Roast** or **Bake**.

04 Press the dial to select the default time, or, turn it to adjust the cooking time.

Press the dial to confirm the change and go to the next field.

05 Press the dial to select the default temperature, or, turn it to adjust the cooking temperature.

Press the dial to confirm the change.

06 Press **Start** to begin. The display shows **On** and the progress bar shows **Pre-heating**.

Adjust the time or temperature any time and press **Start** to confirm the change. Changes made after the Smart Program begins are not saved.

Stage 2: Adding food

01 When the air fryer lid reaches the perfect temperature, the display shows **Add Food**, then changes to the cooking time and starts the countdown.

You can put food in the inner pot before or after preheating, as your recipe recommends. Cooking will start 10 seconds after the notification appears, whether food has been added or not.

02 Carefully lift the air fryer lid off the multicooker base and place it on the protective pad.

Lifting the lid pauses cooking.

03 Using proper hand protection, carefully insert the food or cooking accessory into the inner pot.

04 Place the air fryer lid back on the multicooker base to resume cooking.

Cooking with the air fryer lid

Stage 3: Cooking

01 During Air Fry and Roast, the multicooker beeps partway through cooking and the display shows **turn Food**.

Some food doesn't need to be flipped. If you don't remove the lid after the turn food indicator appears, cooking continues after 10 seconds.

02 If you want to turn or toss your food, lift the lid off the cooker base and place it on the protective pad

Carefully turn, flip, or rotate your food items, then place the air fryer lid back on the multicooker base to resume cooking.

If the lid is left off for longer than 3 minutes, the multicooker goes back to standby mode and shows **OFF**.

03 When one minute remains, the display counts down by seconds.

04 When the Smart Program completes, the cooker beeps and the display shows **End**. The fan may keep blowing for up to 5 minutes or until you lift the lid.

05 The air fryer lid beeps to remind you that cooking has ended 5 minutes, 20 minutes, and 60 minutes after cooking finishes.

Cooking tips

Cook all your favorite fresh and frozen oven-baked and deep-fried snacks – fast!

- Preheating is an important step! Wait for the **Add Food** message to appear before adding food to the inner pot.
- For coated food, like onion rings or deep-fried pickles, use an egg wash with breadcrumbs rather than liquid-based batters to make sure that batter sticks to the food.
- Spray food items with cooking oil before adding seasoning to get the seasoning to stick well.
- For super crispy fries, soak your fresh cut potato sticks in ice water for 15 minutes, then pat them dry and spray them lightly with oil before cooking.
- Patting dry moist food items before cooking prevents excess steam and splatter and gives you crispier results.

Check out the **cooking timetables**, download the **Instant Pot app**, or, visit our **recipe site** for fun, easy-to-follow recipes.

Cooking times are a recommendation only.

⚠ CAUTION

When cooking meat, always use a meat thermometer to ensure the internal temperature reaches a safe minimum temperature. Refer to the USDA's **Safe Minimum Internal Temperature Chart** or Health Canada's **Cooking Temperatures Chart** for more information.

Cooking with the air fryer lid

Broil and Dehydrate

These Smart Programs operate on opposite ends of the temperature spectrum, with Broil being the hottest program and Dehydrate being the coolest!

Smart program	Default time	Time range	Default temperature	Temperature range
Broil	6 minutes (**00:06**)	1 to 40 minutes (**00:01** to **00:40**)	232°C 450°F	Not adjustable.
	Broiling involves direct top-down heating, and broiled foods benefit from being placed close to the element. Perfect for melting cheese on French onion soup.			
Dehydrate	7 hours (**07:00**)	1 to 72 hours (**01:00** to **72:00**)	52°C 125°F	41 to 74°C 105 to 165°F
	Applies low heat over a long period of time to safely dry out food items. Make fruit leather, dehydrated vegetable chips and all kinds of jerky. Always follow a trusted recipe when dehydrating meat.			

Stage 1: Setting up the Pro Crisp for cooking

01 Place your food on a cooking accessory or directly in the inner pot.

02 Insert the inner pot into the multicooker base.

03 Place the air fryer lid on the cooker base by lining up the lid fins with the inner pot handles.

Press the lid down to ensure the power pins on the lid make full contact with the power pad on the multicooker base.

Stage 2: Cooking

01 Select a Smart Program: **Broil** or **Dehydrate**.

02 Press the dial to select the default time, or, turn it to adjust the cooking time.

Press the dial to confirm the change and go to the next field.

03 Press the dial to select the default temperature, or, turn it to adjust the cooking temperature.

Press the dial to confirm the change.

Broiling temperature is not adjustable.

04 Press **Start** to begin. The display shows **On** and the cooking time begins to count down.

Adjust the time or temperature any time and press **Start** to confirm the change. Changes made after the Smart Program begins are not saved.

05 When one minute remains, the display counts down in seconds.

06 When the Smart Program completes, the cooker beeps and the display shows **End**. The fan may keep blowing for up to 5 minutes or until you lift the lid.

The Air Fryer Lid beeps to remind you that cooking has ended 5 minutes, 20 minutes, and 60 minutes after cooking finishes.

Care, cleaning and storage

Clean your Instant Pot Pro Crisp and its parts after each use. Failure to follow these cleaning instructions may result in catastrophic failure, which may lead to property damage and/or severe personal injury.

Always unplug your multicooker and let it cool to room temperature before cleaning. Never use metal scouring pads, abrasive powders, or harsh chemical detergents on any of the Instant Pot's parts or accessories.

Let all surfaces dry thoroughly before use, and before storage.

Parts	Cleaning methods and instruction
Accessories • Multi-functional rack • Broil/dehydrating tray • Multi-level air fryer basket • Basket base • Protective pad and storage cover	Dishwasher safe if placed on the top rack, otherwise clean with a damp cloth and mild dish soap and rinse well with clear, warm water. • Disassemble the multi-level air fryer basket before cleaning. • Optionally, spray the broil/dehydrating tray and/or basket interior with non-stick cooking spray before adding food for easier cleanup. • Use the reverse side of the protective pad to cover the air fryer lid when storing.
Pressure cooker lid and parts • Steam release valve • Steam release cover • Anti-block shield • Sealing ring • Float valve • Silicone cap • QuickCool protective cover • Condensation collector	Dishwasher safe if placed on the top rack. Remove all the parts from the lid before cleaning. See **Care, cleaning and storage: Removing and installing parts**. • With the steam release valve and anti-block shield removed, clean the interior of the steam release pipe with a pipe cleaner to prevent clogging. • To drain water from the lid after dishwashing, grasp the lid handle and hold the lid vertically over a sink, then turn it 360°– like turning a steering wheel. • After cleaning and draining, store the lid upside down on the multicooker base to allow it to air dry completely. • Store sealing rings in a well-ventilated area to decrease residual odor of flavorful meals. To eliminate odors, add 1 cup (250 mL / ~8 oz) water and 1 cup (250 mL / ~8 oz) white vinegar to the inner pot, then run Pressure Cook for 5 to 10 minutes and QR pressure. • Check the condensation collector after each use and empty and clean it as needed. Do not allow food or moisture to sit in the condensation collector, as harmful bacteria may result.

Care, cleaning and storage

Parts	Cleaning methods and instruction
Air fryer lid	Clean with a barely-damp cloth and mild dish soap, then use a clean, barely-damp sponge to remove the soap residue. **DO NOT machine wash or submerge in water or other liquid**. • Always check the element cover for oil spatter and food debris and remove it before turning on the air fryer lid. • To remove baked-on grease and food residue, spray the element cover with a mixture of baking soda and vinegar and wipe clean with a damp cloth. • For stubborn stains, allow the mixture to sit on the affected area for several minutes before scrubbing clean. Make sure not to use anything more abrasive than a toothbrush to scrub the element cover. • DO NOT remove the element cover. • DO NOT rinse or immerse the air fryer lid in water or other liquid.
Inner pot	Dishwasher safe. • Acute hard water staining (rainbow, bluish or white discoloration) may require scrubbing with a sponge dampened with vinegar or a nonabrasive cleanser like Bar Keeper's Friend®. • For tough or burned food residue, add boiling water and dish soap to the inner pot and let it sit for a few hours for easy cleaning. • Make sure all exterior surfaces are dry before placing the inner pot in the multicooker base.
Multicooker base	Clean with a barely-damp sponge and mild dish soap, then use a clean, barely-damp sponge to remove the soap residue. **DO NOT machine wash or submerge in water or other liquid.** • Wipe the inside of the outer pot and the condensation rim to ensure food particles are removed. Allow them to dry completely before inserting the inner pot. • Wipe the control panel as needed. • Wipe dry to avoid streaking.
Power cord	Clean as needed with a barely-damp cloth. • Wrap the power cord around the multicooker base and tuck the end into the cord holder.

Some discoloration may occur after machine washing, but this will not affect the multicooker's safety or performance.

Care, cleaning and storage

⚠ WARNING
The multicooker base contains electrical components. To avoid fire, electric leakage and/or personal injury, make sure the multicooker base always stays dry. • DO NOT immerse the multicooker base in water or other liquid or attempt to cycle it through the dishwasher. • DO NOT rinse the heating element. • DO NOT submerge or rinse the power cord or the plug.

⚠ WARNING	
Without proper cleaning, food and grease splatter may build up around the heating element, causing the risk of smoke, fire, and personal injury.	If you see or smell black smoke, press **Cancel** and unplug the air fryer lid. Once cool, clean the affected area as directed to avoid personal injury and/or property damage.

Storing the air fryer lid

The protective pad and storage cover does double duty: protecting your counters from the heat of the air fryer lid, and protecting the heating element and cover while it's not in use.

01 Flip the protective pad over so the grooved side faces up.

02 Lower the air fryer lid onto the protective pad as indicated in the image below.

03 Turn the air fryer lid clockwise until the protective pad locks into place.

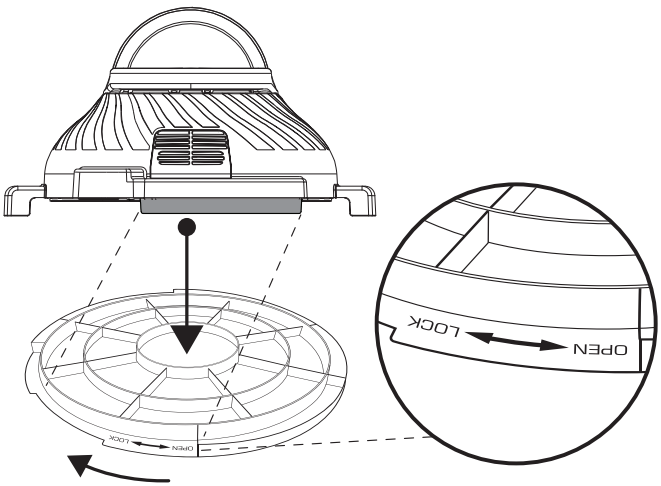

Care, cleaning and storage

Removing and installing parts

Silicone sealing ring

Remove the sealing ring

Grip the edge of the silicone and pull the sealing ring out from behind the circular stainless-steel sealing ring rack.

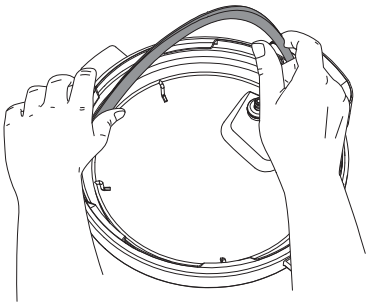

With the sealing ring removed, check the ring rack to make sure it is secured, centered, and an even height all the way around the lid. Do not attempt to repair a deformed ring rack.

Instant Tip: The sealing ring is easiest to remove and install when it is wet and soapy.

Install the sealing ring

Place the sealing ring over the sealing ring rack and firmly press it into place. Make sure there's no puckering.

It should be snug behind the sealing ring rack. It may wiggle a bit but shouldn't fall out when you turn over the lid.

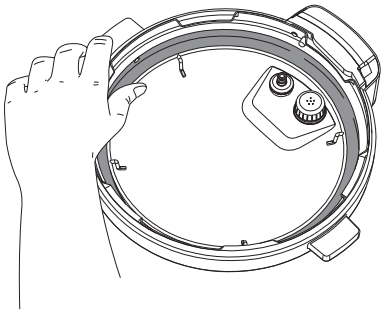

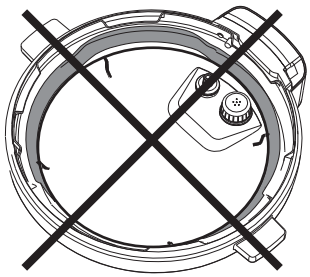

Care, cleaning and storage

Steam release assembly

Remove the steam release assembly
Remove the steam release cover, then pull the steam release valve up and off the steam release pipe.

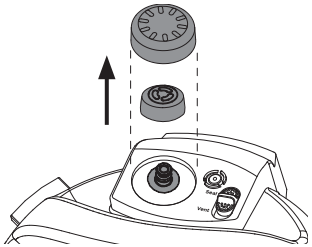

Install the steam release assembly
Place the steam release valve on the steam release pipe and press down firmly.

The steam release valve sits loosely on the steam release pipe but should remain in place when the lid is turned over.

Place the steam release cover over the steam release valve and press down. The cover pressure-fits in place.

QuickCool protective cover

Remove the protective cover
Grip the tab and push it towards the lid handle, then pull it up, towards you, and off.

Install the protective cover
Grip the tab and slide the cover towards the back of the metal portion of the lid, then press down until it clicks.

Anti-block shield

Remove the anti-block shield
Grip the lid like a steering wheel and use your thumbs to press firmly against the side of the anti-block shield (pressing towards the side of the lid and up) until it pops off the prongs underneath.

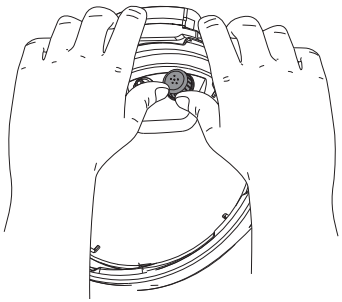

Install the anti-block shield
Place the anti-block shield over the prongs and press down until it snaps into position.

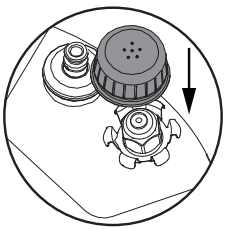

Care, cleaning and storage

Float valve and silicone cap

Remove the float valve from the lid
Place one finger on the flat top of float valve, then turn the lid over. Detach the silicone cap from the bottom side of the float valve, and remove the float valve from the top of the lid.

Do not discard the float valve or silicone cap!

Top

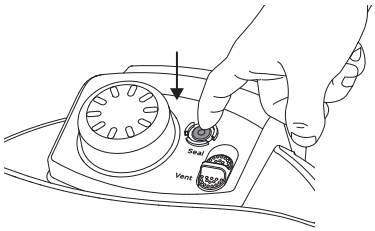

Bottom

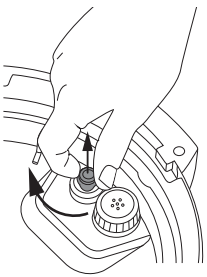

Install the float valve
Drop the narrow end of the float valve into the float valve hole on the top of the lid. Place one finger on the flat top of the float valve, then turn the lid over. Firmly attach the silicone cap to the bottom of the float valve.

Condensation collector

The condensation collector sits at the back of the multicooker base and catches any overflow from the condensation rim.

Remove the condensation collector
Pull the condensation collector away from the multicooker base; do not pull down. Note the tabs on the multicooker base and the grooves on the condensation collector.

Install the condensation collector
Align the grooves on the condensation collector over the tabs on the back of the multicooker base and slide the condensation collector into place like closing a drawer.

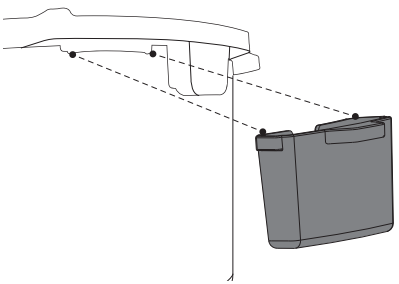

Troubleshooting

Register your Instant Pot Pro Crisp today!

If your issue persists or you have any additional questions, get in touch with a Customer Care Advisor through our chat widget at **instantpot.com/#chat**, by email at **support@instantpot.com** or by phone at **1-800-828-7280**.

Problem	Possible reason	Try this
The air fryer lid is in place but will not turn on, or, turns off during cooking.	The appliance is not properly plugged in.	Plug the power cord firmly into a grounded 120 V outlet.
	The connection between the air fryer lid and the multicooker base is loose or broken.	Make sure the air fryer lid is seated correctly on the pressure cooker base, then gently press down.
	Bad power connection or no power.	Check the outlet to make sure it is powered. Inspect the power cord for damage. If you notice damage, contact **Customer Care**.
	Electrical fuse has blown.	Contact **Customer Care**.
	Microswitch is dirty or damaged.	Contact **Customer Care**.
Black smoke is coming from the air fryer lid.	**⚠CAUTION** Stop cooking immediately. Press **Cancel**, then unplug the appliance. When smoking stops, place the Air Fryer Lid on the protective pad.	
	Food residue on the heating coil, in the cooking chamber or on the accessories.	Allow the air fryer lid to cool to room temperature before cleaning. Remove food and accessories, then clean the affected area thoroughly.
	Using an oil with a low smoke point.	Choose a neutral oil with a high smoke point, such as canola, avocado, soybean, safflower or rice bran oil.
	Faulty circuit or heating element.	Contact **Customer Care**.
White smoke is coming from the air fryer lid.	Cooking foods with a high fat content, such as bacon, sausage and burgers, may result in white smoke.	Avoid air frying fatty foods.
	Water is vaporizing, producing thick steam.	Pat dry moist food ingredients before air frying. Do not add water or other liquid to the inner pot when air frying.
	Seasoning on food has blown into the element.	Be mindful when seasoning food. Spray vegetables and meats with oil before seasoning to help the seasoning stick.

Troubleshooting

Problem	Possible reason	Try this
Occasional clicking or light cracking sound.	The sound of power switching, or the pressure board may be expanding due to changing temperatures.	This is normal; no action needed.
	Bottom of the inner pot is wet.	Wipe exterior surfaces of the inner pot. Make sure the heating element is dry before inserting the inner pot into the multicooker base.
Difficulty closing the pressure cooking lid.	Sealing ring is not properly installed.	Reposition the sealing ring. Make sure it is snug behind the sealing ring rack.
	Float valve is in the popped-up position.	Gently press the float valve downward with a long utensil.
	Contents in multicooker are still hot.	Move the quick release switch to the **Vent** position, then slowly lower the lid onto the multicooker base, allowing heat to dissipate.
Difficulty opening the pressure cooking lid.	**⚠ DANGER** Contents may be under pressure. To avoid scalding injury, DO NOT attempt to force the lid open.	
	Pressure inside the multicooker.	Release pressure according to recipe. Only open the lid after the float valve has dropped down.
	Float valve stuck in the popped-up position due to food debris or residue.	Make sure steam is completely released by quick releasing pressure, then press the float valve gently with a long utensil. Open the lid cautiously, then thoroughly clean the float valve, surrounding area and lid before next use.
The inner pot is stuck to the pressure cooking lid when the multicooker is opened.	Cooling of the inner pot may create suction, causing the inner pot to adhere to the lid.	To release the vacuum, move the quick release switch into the **Vent** position.
Steam leaks from the side of the pressure cooking lid.	No sealing ring in the lid.	Install a sealing ring.
	The sealing ring is damaged or not installed properly.	Replace the sealing ring.
	Food debris attached to the sealing ring.	Remove the sealing ring and clean it thoroughly.
	The lid is not closed properly.	Open, then close the lid.
	The sealing ring rack is warped or off-center.	Remove the sealing ring from the lid, then check the sealing ring rack for bends or warps. Contact **Customer Care**.
	The inner pot rim may be misshapen.	Check for deformation and contact **Customer Care**.

Troubleshooting

Problem	Possible reason	Try this
The float valve does not rise.	Food debris on the float valve or float valve silicone cap.	Remove the float valve from the lid and clean it thoroughly. Perform the **Initial test run** to check for function and record your findings. Contact **Customer Care**.
	Too little liquid in the inner pot.	Check for scorching on the bottom of the inner pot. Add thin, water-based liquid to the inner pot according to its size. 8 Qt: 2 cups (500 mL / ~16 oz)
	Float valve's silicone cap damaged or missing.	Install or replace the float valve and/or silicone cap.
	Float valve obstructed by lid-locking mechanism.	Tap the float valve with a long utensil. If the float valve does not drop, turn the multicooker off. Contact **Customer Care**.
	No heat in the inner pot.	Perform the **Initial test run** to check for function and record your findings. Contact **Customer Care**.
	Inner pot base may be damaged.	Perform the **Initial test run** to check for function and record your findings. Contact **Customer Care**.
Minor steam leaking or hissing from the steam release valve during Cooking.	Quick release switch is not in the **Seal** position.	Move the quick release switch into the **Seal** position.
	The multicooker is regulating excess pressure.	This is normal; no action required.
Steam gushes from the steam release valve while the quick release switch is in the Seal position.	Not enough liquid in the inner pot.	Add thin, water-based liquid to the inner pot according to its size. 8 Qt: 2 cups (500 mL / ~16 oz)
	Pressure sensor control failure.	Contact **Customer Care**.
	Steam release valve is not seated properly.	Release pressure, then make sure the steam release valve is installed properly. See **Care, cleaning and storage: Removing and installing parts**.
The display remains blank after connecting the power cord.	Bad power connection or no power.	Check outlet to make sure it is powered. Inspect power cord for damage. If you notice damage, contact **Customer Care**.
	The multiooker's electrical fuse has blown.	Contact **Customer Care**.

Troubleshooting

Problem	Possible reason		Try this
Error code appears on the display and the multicooker beeps continuously.	C1 C2 C6 C6H C6L	Faulty sensor.	Contact **Customer Care**.
	C5	Temperature is too high – the inner pot may not be in the multicooker base.	Press **Cancel** and wait for the heating element to cool; make sure there are no foreign objects in the multicooker base; insert or reposition inner pot in multicooker base and re-enter commands.
		Temperature is too high.	Check for scorching on bottom of inner pot. Add thin, water-based liquid to the inner pot according to its size. 8 Qt: 2 cups (500 mL / ~16 oz)
	C7 or NoPr	Heat element has failed.	Contact **Customer Care**.
		Not enough liquid.	Add thin, water-based liquid to the inner pot according to its size. 8 Qt: 2 cups (500 mL / ~16 oz)
		Quick release switch is in the **Vent** position.	Move the quick release switch into the **Seal** position.
	C8	Incorrect inner pot is used.	Only use a stainless-steel Pro Series inner pot with easy-grip handles with the Pro Crisp.
	C9	Sensor issue.	Contact **Customer Care**.
	Lid	Lid is not in the correct position for the selected program.	Open and close the lid. Do not use a lid when using **Sauté**.
	Pot	The inner pot is not in the multicooker base.	Place the stainless-steel inner pot in the multicooker base.
	Food burn	High temperature detected at bottom of inner pot; multicooker automatically reduces the temperature to avoid overheating.	Starch deposits at the bottom of the inner pot may have blocked heat dissipation. Turn the multicooker off, release pressure and inspect the bottom of the inner pot.
	PrSE	Pressure has accumulated during a non-pressure cooking program.	Move the quick release switch into the **Vent** position.

Any other servicing must be performed by an authorized representative.

Warranty

Limited Warranty

This Limited Warranty is effective for one year from the date of original consumer purchase. Proof of original purchase date and, if requested by an authorized representative of Instant Brands Inc. ("Instant Brands"), return of your appliance, is required to obtain service under this Limited Warranty. Provided that this appliance is operated and maintained in accordance with written instructions attached to or furnished with the appliance, Instant Brands will, in its sole and exclusive discretion, either: (i) repair defects in materials or workmanship; or (ii) replace the appliance. In the event that your appliance is replaced, the Limited Warranty on the replacement appliance will expire 12 months from the date of original consumer purchase.

This Limited Warranty extends only to the original purchaser and use of the appliance in the United States of America and Canada. This warranty does not cover units that are used outside of the United States of America and Canada.

Any modification or attempted modification to your appliance may interfere with the safe operation of the appliance and will void this Limited Warranty. This Limited Warranty does not apply in respect of any appliance or any part thereof that has been altered or modified unless such alterations or modifications were expressly authorized by an Instant Brands representative.

Limitation and Exclusions

The liability of Instant Brands, if any, for any allegedly defective appliance or part shall in no circumstances exceed the purchase price of a comparable replacement appliance.

This Limited Warranty does not cover:

1. Damage resulting from accident, alteration, misuse, abuse, neglect, unreasonable use, use contrary to the operating instructions, normal wear and tear, commercial use, improper assembly, disassembly, failure to provide reasonable and necessary maintenance, fire, flood, acts of God or repair by anyone unless directed by an Instant Brands Representative;
2. Repairs where your appliance is used for other than normal, personal use or when it is used in a manner that is contrary to published user or operator instructions; or
3. Use of unauthorized parts and accessories, or repairs to parts and systems resulting from unauthorized repairs or modifications made to this appliance.

The cost of repair or replacement under these excluded circumstances shall be paid by you.

Warranty

Disclaimer of Implied Warranties

EXCEPT AS EXPRESSLY PROVIDED HEREIN AND TO THE EXTENT PERMITTED BY LAW, INSTANT BRANDS MAKES NO WARRANTIES, CONDITIONS OR REPRESENTATIONS, EXPRESS OR IMPLIED, BY STATUTE, USAGE, CUSTOM OF TRADE OR OTHERWISE WITH RESPECT TO THE APPLIANCES OR PARTS COVERED BY THIS WARRANTY, INCLUDING BUT NOT LIMITED TO, WARRANTIES, CONDITIONS, OR REPRESENTATIONS OF WORKMANSHIP, MERCHANTABILITY, MERCHANTABLE QUALITY, FITNESS FOR A PARTICULAR PURPOSE OR DURABILITY.

Some states or provinces do not allow for the exclusion of implied warranties of merchantability or fitness, so this limitation may not apply to you. In these states and provinces, you have only the implied warranties that are expressly required to be provided in accordance with applicable law.

Limitation of Remedies; Exclusion of Incidental and Consequential Damage

YOUR SOLE AND EXCLUSIVE REMEDY UNDER THIS LIMITED WARRANTY SHALL BE APPLIANCE REPAIR OR REPLACEMENT AS PROVIDED HEREIN. INSTANT BRANDS SHALL NOT BE LIABLE FOR INDIRECT, INCIDENTAL OR CONSEQUENTIAL DAMAGES ARISING OUT OF OR IN CONNECTION WITH THE USE OR PERFORMANCE OF THE APPLIANCE OR DAMAGES WITH RESPECT TO ANY ECONOMIC LOSS, PERSONAL INJURY, LOSS OF PROPERTY, LOSS OF REVENUES OR PROFITS, LOSS OF ENJOYMENT OR USE, COSTS OF REMOVAL, INSTALLATION OR OTHER INDIRECT, INCIDENTAL OR CONSEQUENTIAL DAMAGES OF ANY NATURE OR KIND.

Warranty Registration

Please visit **www.instantpot.com/support/register** to register your new Instant Brands™ appliance and validate your warranty within thirty (30) days of purchase. You will be asked to provide the store name, date of purchase, model number (found on the back of your appliance) and serial number (found on the bottom of your appliance) along with your name and email address. The registration will enable us to keep you up to date with product developments, recipes and contact you in the unlikely event of a product safety notification. By registering, you acknowledge that you have read and understand the instructions for use, and warnings set forth in the accompanying instructions.

Warranty Service

To obtain service under this warranty, please contact our Customer Service Department by phone at 1-800-828-7280 or by email to support@instantpot.com. You can also create a support ticket online at www.instantpot.com/support. If we are unable to resolve the problem, you may be asked to send your appliance to the Service Department for quality inspection. Instant Brands is not responsible for shipping costs related to warranty service, save and except for shipping costs associated with the return of your appliance from Canada or within the 48 contiguous states and the District of Columbia of the United States of America, as provided herein. When returning your appliance, please include your name, mailing address, email address, phone number, and proof of the original purchase date as well as a description of the problem you are encountering with the appliance.

Instant Pot®

Instant Brands Inc.
11–300 Earl Grey Dr., Suite 383
Ottawa, Ontario
K2T 1C1
Canada

Register your product today
instantpot.com/support/register

Contact us
1-800-828-7280
support@instantpot.com
instantpot.com/#chat

instantpot.com
store.instantpot.com

Copyright © 2020 Instant Brands™ Inc
633-0101-41